DETAIL 03410-4
COBB COUNTY WATER SYSTEM
DOGHOUSE MANHOLE

MAY 1, 2001

AGENCY DIRECTOR

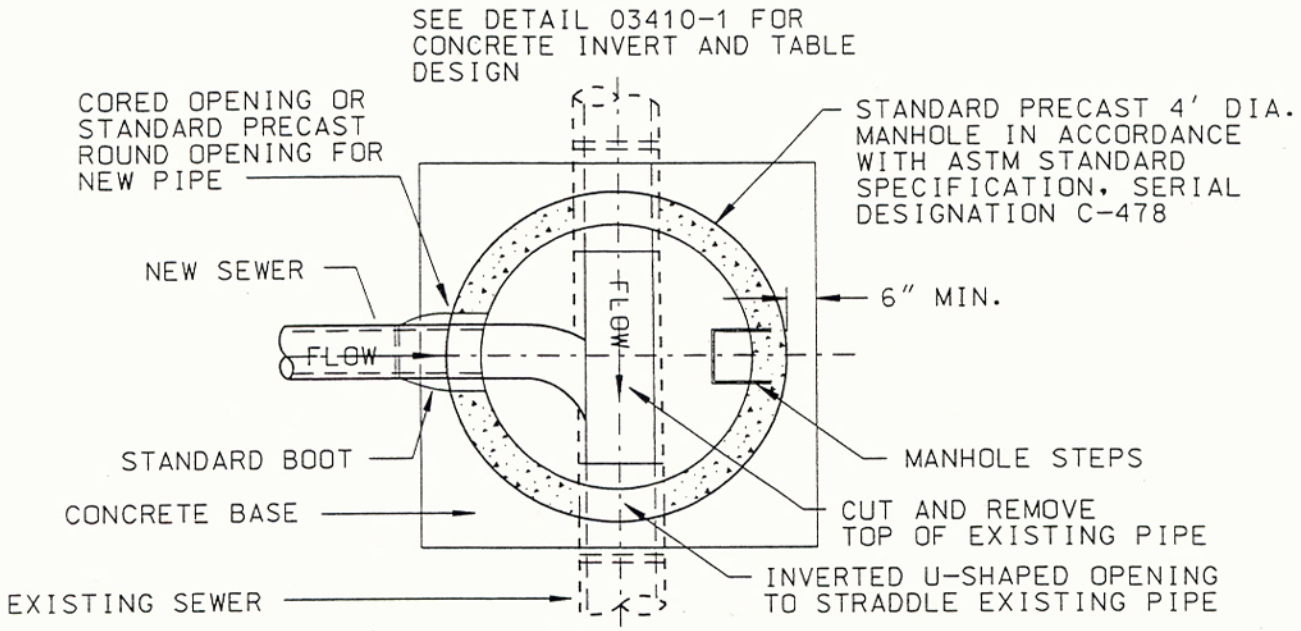

PLAN VIEW

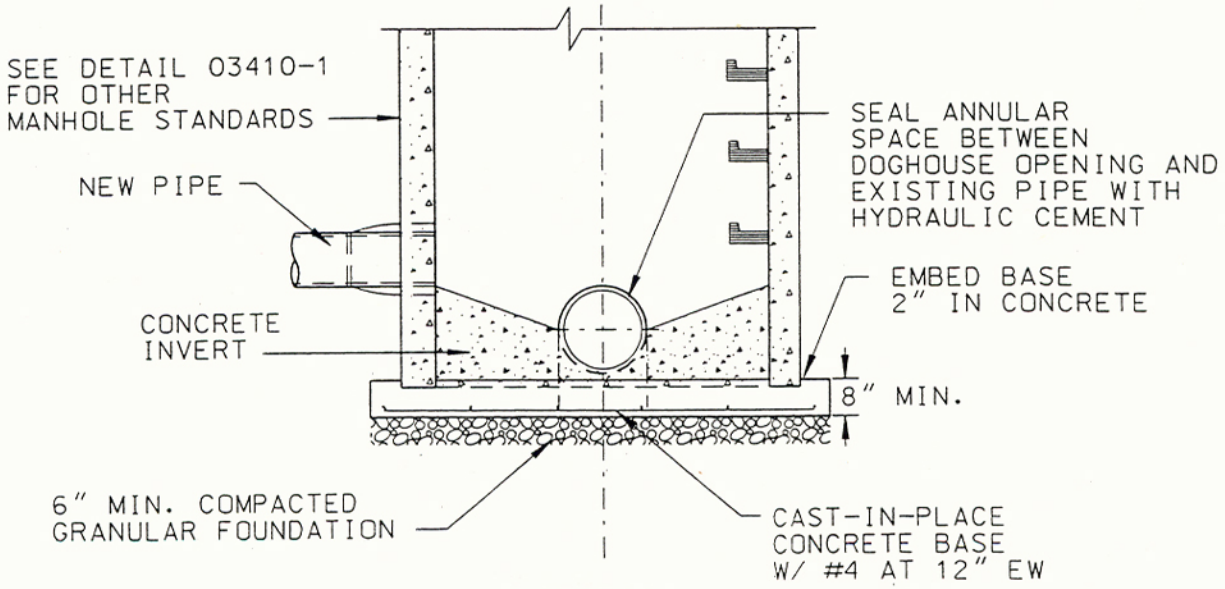

SECTION