DETAIL 03410-1
COBB COUNTY WATER SYSTEM
STANDARD MANHOLE
(< 20 DEPTH)

MAY 1, 2001
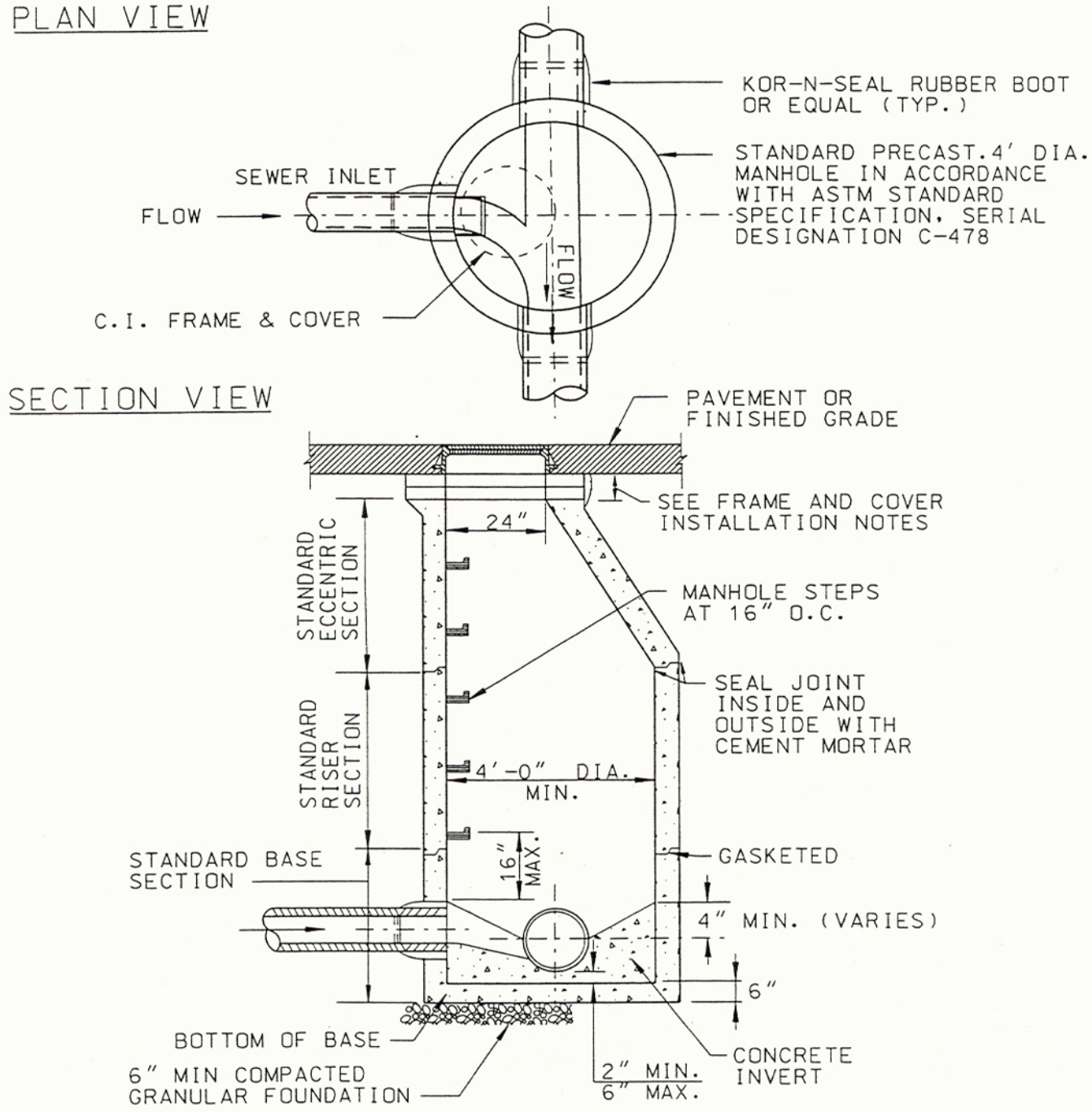
AGENCY DIRECTOR