DETAIL 02713-6
COBB COUNTY WATER SYSTEM
LINE ABANDONMENT AT VALVE

AUGUST 7, 2001

AGENCY DIRECTOR

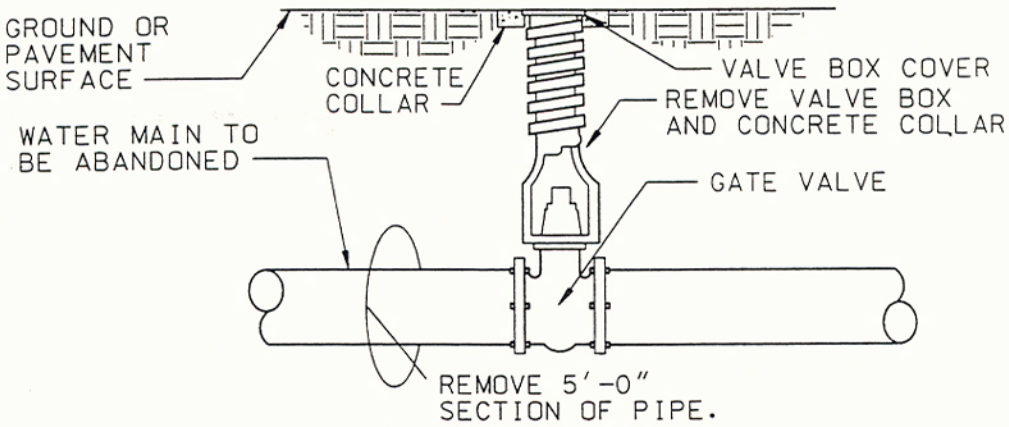

EXISTING SECTION

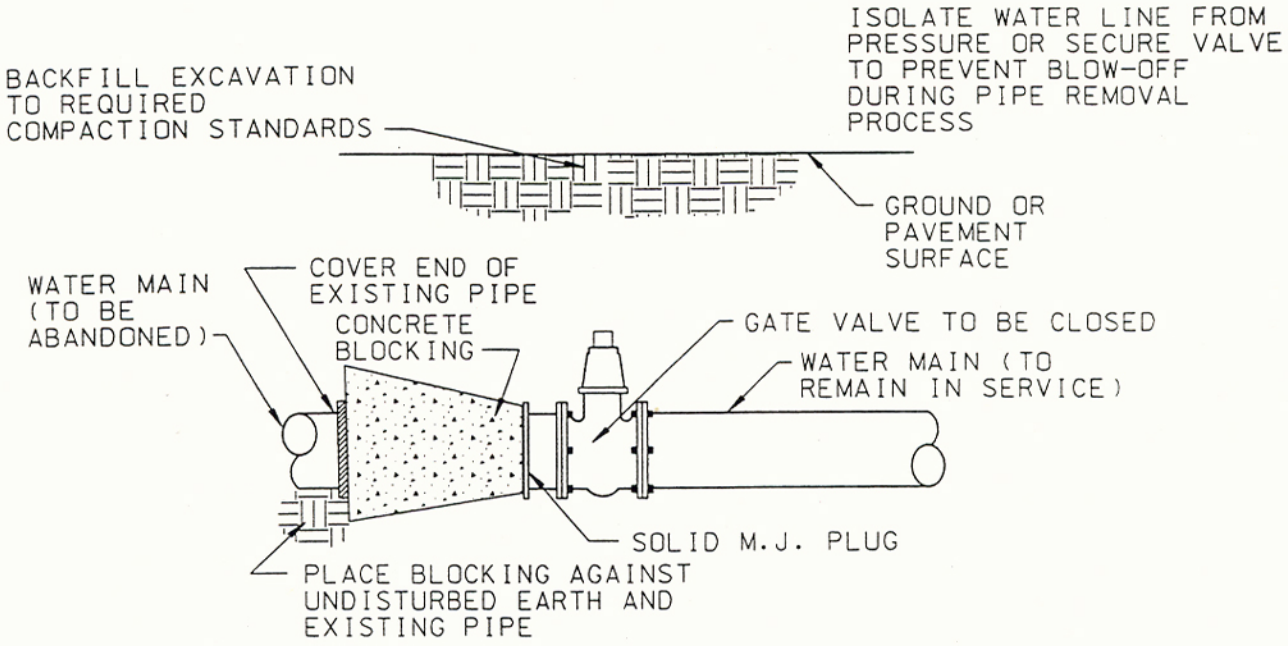

REVISED SECTION