DEVELOPMENT STANDARD 403
OFF STREET PARKING FACILITIES

Parallel Parking space

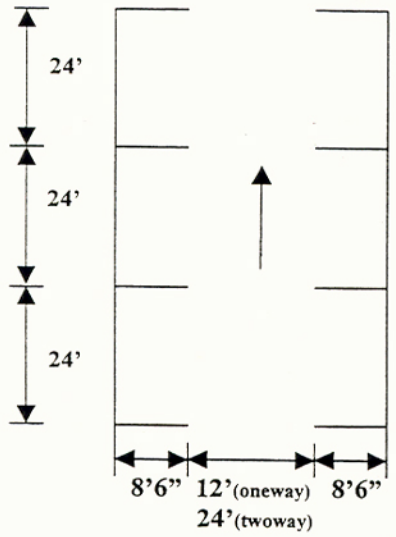

90° Parking space

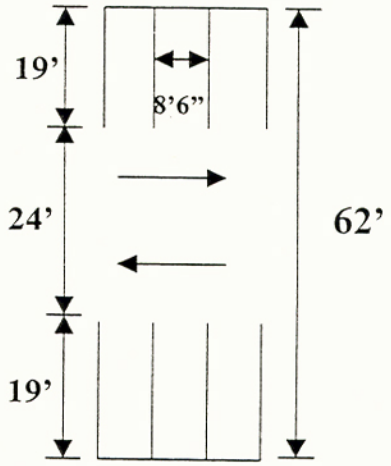

45° Parking space

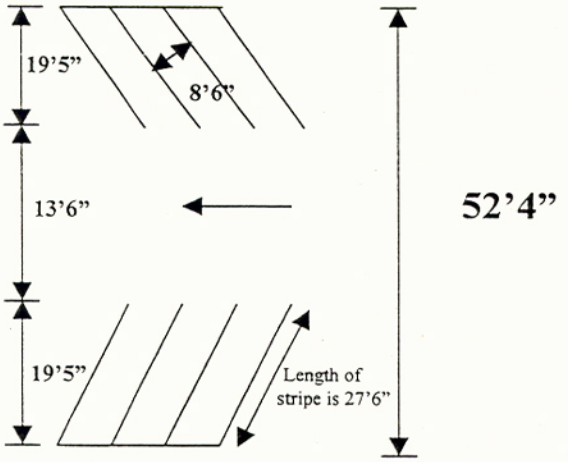
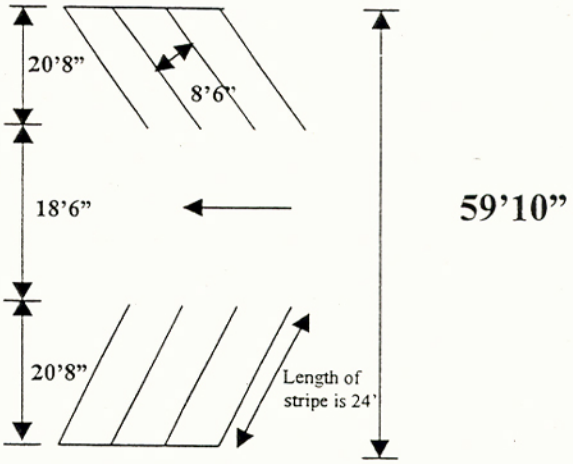
60° Parking space