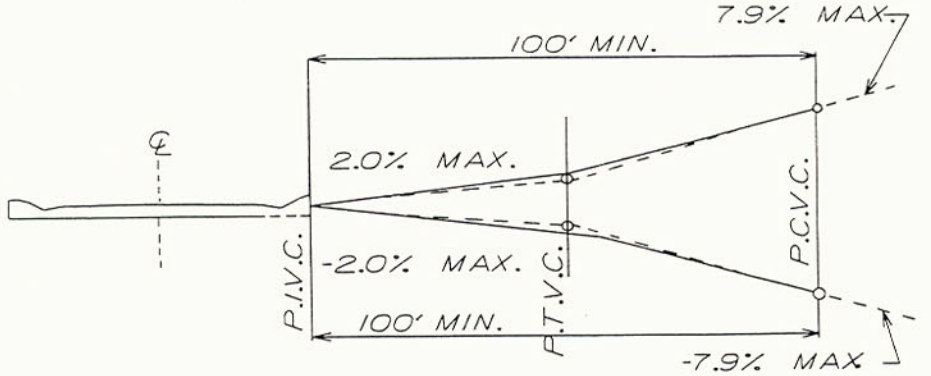

LANDING REQUIREMENTS
FOR GRADES 7.9% OR LESS

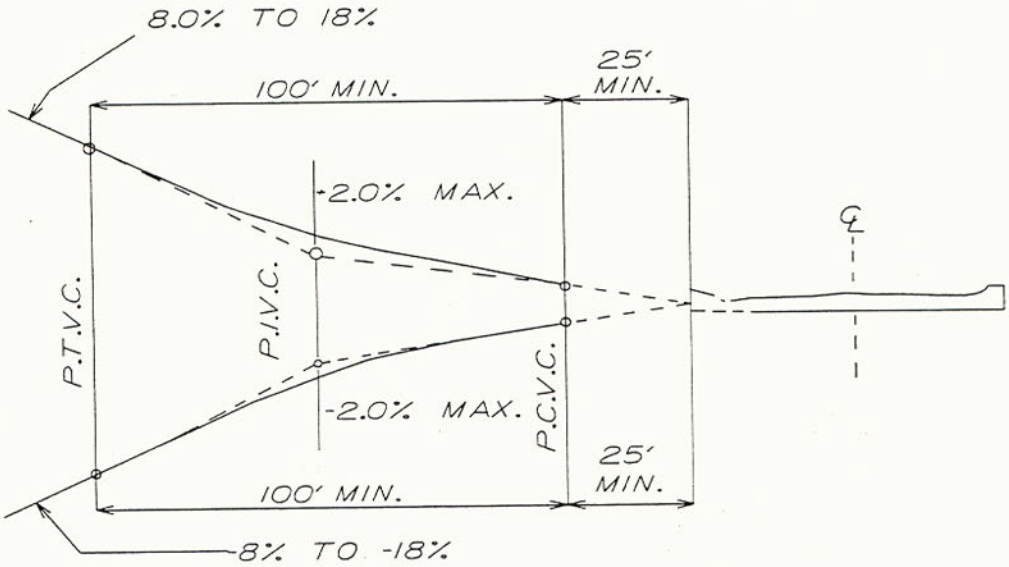

LANDING REQUIREMENTS
FOR GRADES 8.0% TO 18% MAX

NOTE: A 1% landing is allowable.
All other grades are to be 1.5% Min.
For street grades other than a local, refer to Development Standards Section 401.12.02.

DEPARTMENT OF TRANSPORTATION

COBB COUNTY STATE OF GEORGIA 1832

INTERSECTION LANDING REQUIREMENTS
DETAIL 103